SECTION CL
CLUTCH

CONTENTS

RS6F51R

PRECAUTIONS 2
Caution 2
PREPARATION 3
Special Service Tools 3
Commercial Service Tool 3
NOISE, VIBRATION AND HARSHNESS (NVH) TROUBLESHOOTING 4
NVH Troubleshooting Chart 4
CLUTCH PEDAL 5
On-Vehicle Inspection and Adjustment 5
CLUTCH PEDAL STROKE INSPECTION 5
CLUTCH PEDAL FREE PLAY INSPECTION 5
CLUTCH PEDAL STROKE ADJUSTMENT 5
CLUTCH PEDAL FREE PLAY ADJUSTMENT 6
Removal and Installation 6
INSPECTION AFTER REMOVAL 7
CLUTCH FLUID 8
Air Bleeding Procedure 8
CLUTCH MASTER CYLINDER 9
Removal and Installation 9
REMOVAL 9
INSTALLATION 9
Disassembly and Assembly 10
DISASSEMBLY 10
INSPECTION AFTER DISASSEMBLY 10
ASSEMBLY 10
OPERATING CYLINDER 11
Removal and Installation 11
REMOVAL 11
INSTALLATION 11
Disassembly and Assembly 11
DISASSEMBLY 11
INSPECTION AFTER DISASSEMBLY 11
ASSEMBLY 12
CLUTCH PIPING 13
Removal and Installation 13
CLUTCH RELEASE MECHANISM 14
Removal and Installation 14
REMOVAL 14
INSPECTION AFTER REMOVAL 14
INSTALLATION 14
CLUTCH DISC, CLUTCH COVER AND FLYWHEEL 16
Removal and Installation 16
REMOVAL 16
INSPECTION AND ADJUSTMENT AFTER REMOVAL 16
INSTALLATION 17
SERVICE DATA AND SPECIFICATIONS (SDS) 18
Clutch Control System 18
Clutch Master Cylinder 18
Clutch Operating Cylinder 18
Clutch Disc 18
Clutch Cover 18
Clutch Pedal 18

PRECAUTIONS

PFP:00001

Caution

ECS0094X

- **Recommended fluid is brake fluid “DOT 3” or “DOT 4”.**
- **Never reuse drained brake fluid.**
- **Be careful not to splash brake fluid on painted areas.**
- **When removing and installing clutch piping, use Tool.**
- **Use new brake fluid to clean or wash all parts of master cylinder and operating cylinder.**
- **Never use mineral oils such as gasoline or kerosene. It will ruin the rubber parts of the hydraulic system.**

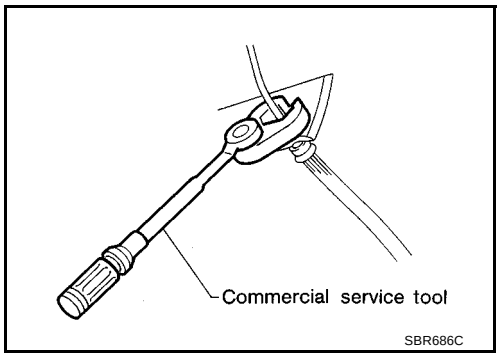

WARNING:
After cleaning clutch disc, wipe it with a dust collector. Do not use compressed air.

PREPARATION

PFP:00002

Special Service Tools

ECS0094Y

Tool name Tool number		Description
Pin punch ST23550000 Tip diameter: 4.5 mm (0.177 in) dia.	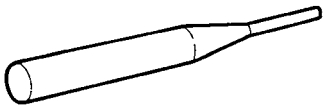 ZZA0515D	Removing and installing master cylinder spring pin
Diaphragm adjusting wrench ST20050240	 ZZA0508D	Adjusting unevenness of diaphragm spring of clutch cover
Clutch aligning bar ST20630000 a: 15.8 mm (0.622 in) dia. b: 22.9 mm (0.902 in) dia. c: 45.0 mm (1.077 in)	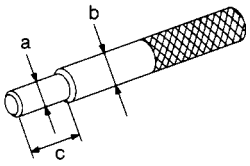 \\ S-NT405	Installing clutch cover and disc

Commercial Service Tool

ECS0094Z

Tool name		Description
1. Flare nut crowfoot 2. Torque wrench a: 10 mm (0.39 in)	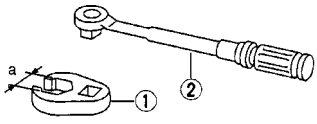 \\ S-NT360	Removing and installing clutch piping

NOISE, VIBRATION AND HARSHNESS (NVH) TROUBLESHOOTING

PFP:00003

NVH Troubleshooting Chart

ECS00950

Use the chart below to help you find the cause of the symptom. The numbers indicate the order of the inspection. If necessary, repair or replace these parts.

Reference page		CL-5	CL-8	CL-9	CL-11	EM-197	CL-14	CL-16	CL-16	CL-16	CL-16	CL-16	CL-16	CL-16	CL-16	CL-17	CL-17	CL-17	CL-17
SUSPECTED PARTS (Possible cause)		CLUTCH PEDAL (Free play out of adjustment)	CLUTCH LINE (Air in line)	MASTER CYLINDER PISTON CUP (Damaged)	OPERATING CYLINDER PISTON CUP (Damaged)	ENGINE MOUNTING (Loose)	RELEASE BEARING (Worn, dirty or damaged)	CLUTCH DISC (Out of true)	CLUTCH DISC (Runout is excessive)	CLUTCH DISC (Lining broken)	CLUTCH DISC (Dirty or burned)	CLUTCH DISC (Oily)	CLUTCH DISC (Worn out)	CLUTCH DISC (Hardened)	CLUTCH DISC (Lack of spline grease)	DIAPHRAGM SPRING (Damaged)	DIAPHRAGM SPRING (Out of tip alignment)	PRESSURE PLATE (Distortion)	FLYWHEEL (Distortion)
Symptom	Clutch grabs/chatters					1			2			2	2	2			2		
	Clutch pedal spongy		1	2	2														
	Clutch noisy						1												
	Clutch slips	1										2	2			3		4	5
	Clutch does not disengage	1	2	3	4			5	5	5	5	5			5	6	6	7	

CLUTCH PEDAL

PFP:46540

On-Vehicle Inspection and Adjustment

ECS00951

CLUTCH PEDAL STROKE INSPECTION

Check clutch pedal stroke by using a 1-meter rule to measure the total pedal stroke. Place end of rule onto the middle of the clutch pedal pad. Place a book/clipboard on the driver's seat to set a reference point, ensure the book/clipboard does not move during pedal depression. Mark (A) the pedal fully up position on the rule. Depress the clutch pedal and mark (B) the rule again next to the reference point on the book/clipboard. Measure the distance between the marks (A and B), this is the actual pedal stroke (S). Check the specified pedal stroke in the table, adjust actual pedal stroke if necessary (refer to CL-5, "CLUTCH PEDAL STROKE ADJUSTMENT").

NOTE:

- Do not use steering wheel as a reference point, angle gives incorrect reading.
- Ensure there is no interference between the floor carped and clutch pedal when fully depressed.

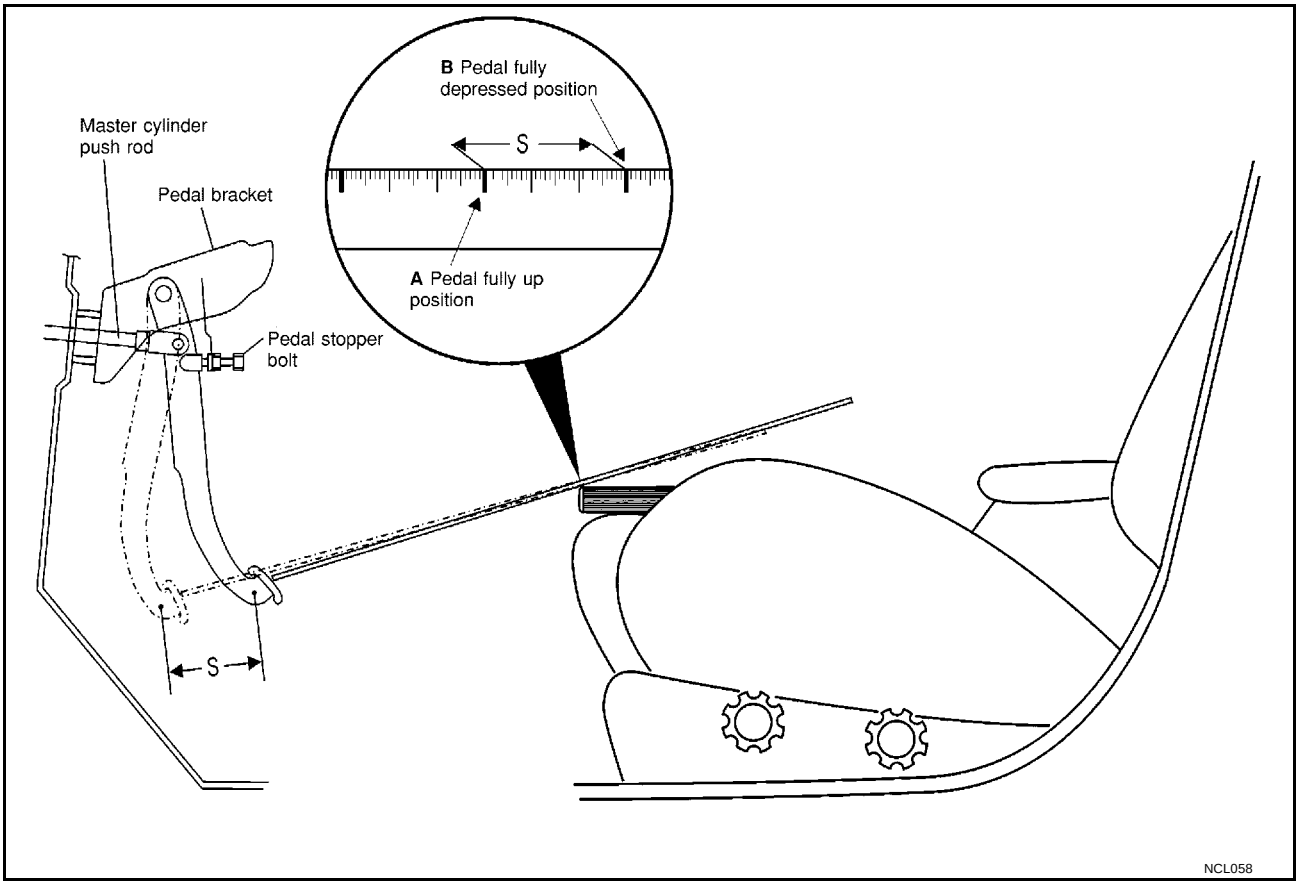

CLUTCH PEDAL FREE PLAY INSPECTION

Check pedal free play, if out of specification refer to CL-5, "CLUTCH PEDAL STROKE ADJUSTMENT" .

- Push on the clutch pedal until resistance is felt, and check the distance the pedal moves.

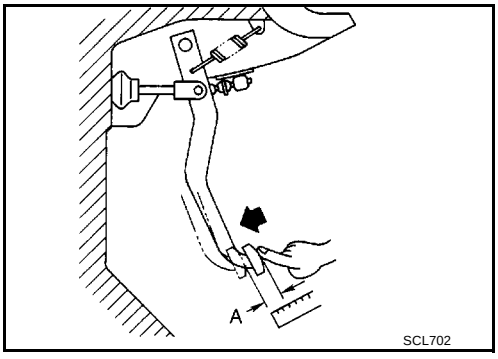

CLUTCH PEDAL STROKE ADJUSTMENT

1. Loosen the pedal stopper bolt completely (so there is on contact between pedal and stopper bolt).
2. Adjust pedal stroke to the specified value with the master cylinder push rod.

3. Adjust the pedal stopper bolt until it is just in contact with the pedal, then tighten the lock nut.
4. Once stroke is set to specification, adjust clutch pedal free play.

Clutch pedal stroke "S": 155 - 160 mm (6.10 - 6.30 in)

CLUTCH PEDAL FREE PLAY ADJUSTMENT

1. Adjust pedal free play to the specified value with the master cylinder push rod.
2. Tighten lock nut of the master cylinder push rod.

- Push on the clutch pedal until resistance is felt, and check the distance the pedal moves.

Pedal free play "A": 1 - 3 mm (0.04 - 0.12 in)

Removal and Installation

ECS00952

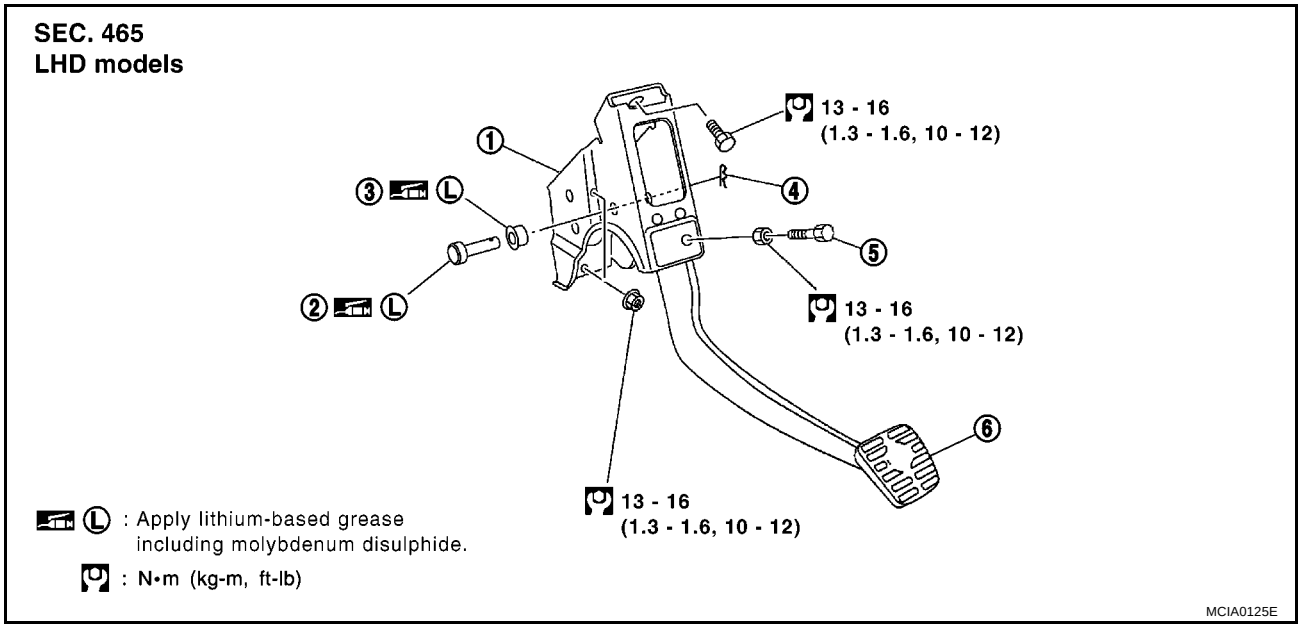

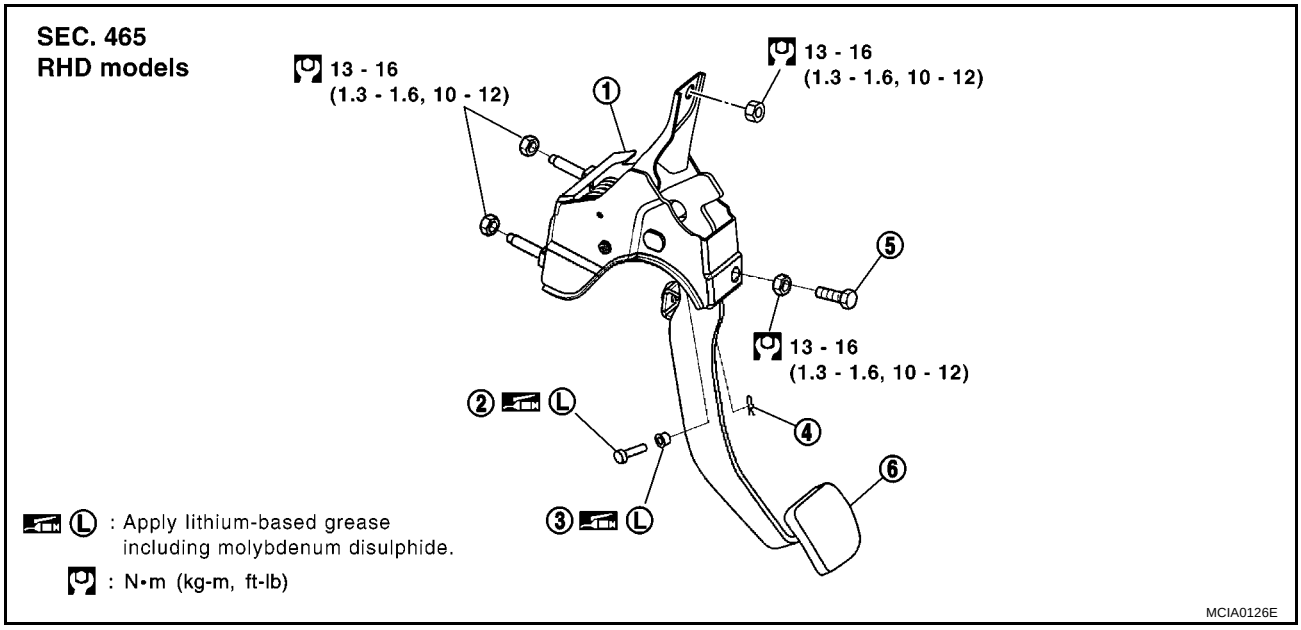

1. Clutch pedal assembly	2. Clevis pin	3. Bushing
4. Snap pin	5. Stopper bolt	6. Clutch pedal

NOTE:
Install clutch pedal assembly and adjust the pedal height. Tighten stopper bolt to the specified torque.

INSPECTION AFTER REMOVAL

- Check clutch pedal for bend, damage, or a cracked weld. If bend, damage, or a cracked weld is found, replace the clutch pedal.
- Check assist spring for settling. If settling is found, replace the assist spring.

CLUTCH FLUID

PFP:00017

Air Bleeding Procedure

ECS00953

CAUTION:

- **Monitor fluid level in the reservoir to make sure it does not empty.**
- **Do not spill clutch fluid onto painted surfaces. If it spills, wipe up immediately and wash the affected area with water.**
- Bleed the operating cylinder.

1. Fill the master cylinder reservoir tank with new clutch fluid.
2. Connect a transparent vinyl hose to the air bleeder.
3. Depress the clutch pedal slowly and fully a few times at an interval of 2 to 3 seconds and hold it.
4. With clutch pedal depressed, open air bleeder.
5. Close air bleeder.
6. Release clutch pedal and wait for 5 seconds.
7. Repeat steps 3 to 6 until no bubbles can be observed in the brake fluid.

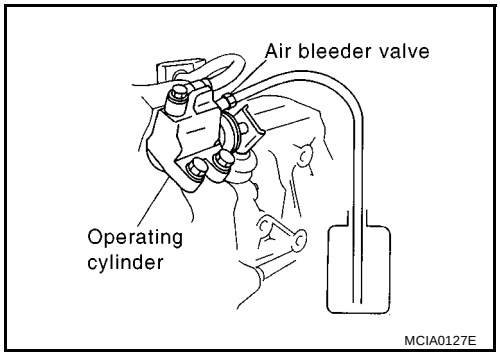

Air bleeder

: 5.9 - 9.8 N·m (0.6 - 1.0 kg·m, 52 - 86 in·lb)

CLUTCH MASTER CYLINDER

PFP:30610

Removal and Installation

ECS00954

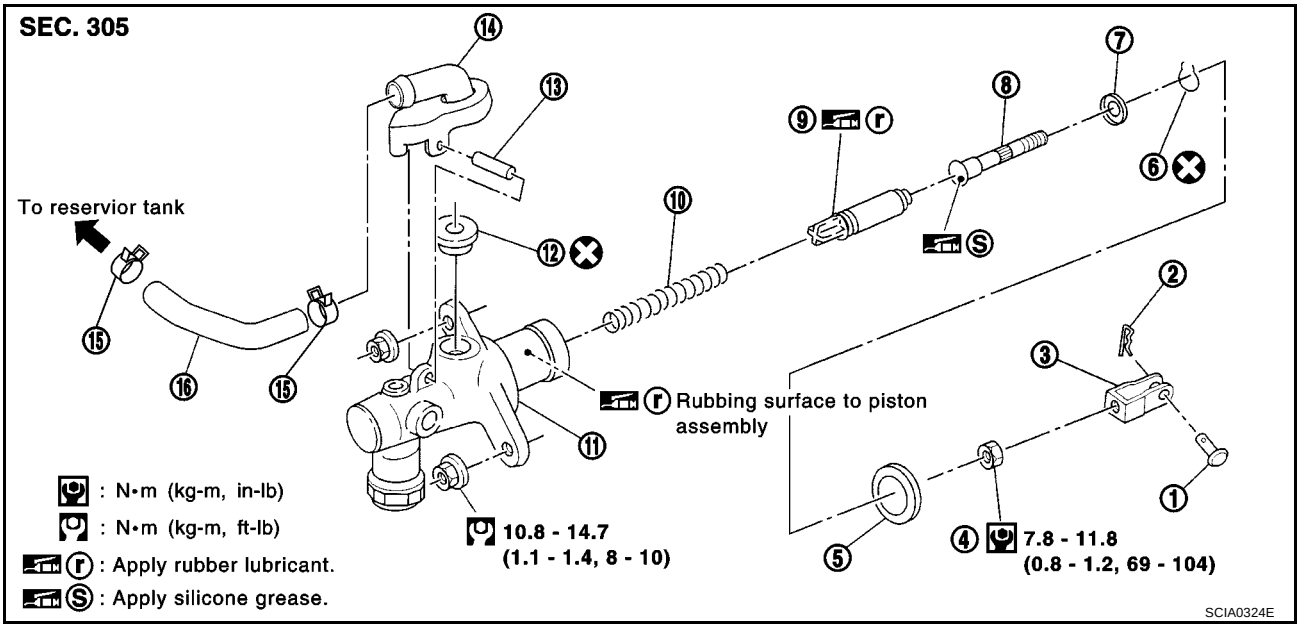

1. Clevis pin	2. Snap pin	3. Clevis
4. Lock nut	5. Dust cover	6. Stopper ring
7. Stopper	8. Push rod	9. Piston assembly
10. Return spring	11. Cylinder body	12. Seal
13. Spring pin	14. Nipple	15. Clamp
16. Hose		

REMOVAL

1. Using one of the following methods, remove hose from the nipple.
   - Drain clutch fluid from reservoir tank and remove hose.
   - Remove hose from the nipple. Immediately plug hose and reservoir tank to prevent clutch fluid from dripping.

   CAUTION:
   Do not spill clutch fluid onto painted surfaces. If it spills, wipe up immediately and wash the affected area with water.
2. Using a flare nut wrench, remove clutch tube.
3. Remove snap pin and clevis pin on clevis in passenger compartment to separate clutch pedal.
4. First remove the mounting nuts on the master cylinder assembly, and then the master cylinder assembly from the vehicle.

INSTALLATION

1. Connect clutch tube to master cylinder assembly and temporarily tighten flare nut.
2. Install master cylinder assembly and tighten mounting nut to the specified torque.
3. Using a flare nut torque wrench, tighten clutch tube flare nut to the specified torque.
4. Attach clevis of the clevis pin to the clutch pedal.
5. Attach snap pin to the clevis pin.
6. Install hose to the nipple.
7. After completing this procedure, inspect and adjust pedal height and then bleed the clutch tube. Refer to CL-5, "On-Vehicle Inspection and Adjustment" , CL-8, "Air Bleeding Procedure"

Disassembly and Assembly

ECS00955

DISASSEMBLY

1. Using a pin punch, remove spring pin, nipple and seal from the cylinder body.
2. Loosen push rod lock nut. Remove clevis and lock nut.
3. Remove dust cover.
4. Remove stopper ring and stopper. Remove push rod from cylinder body while holding it securely to reduce possibility of the piston popping out.
5. Remove piston assembly and return spring.

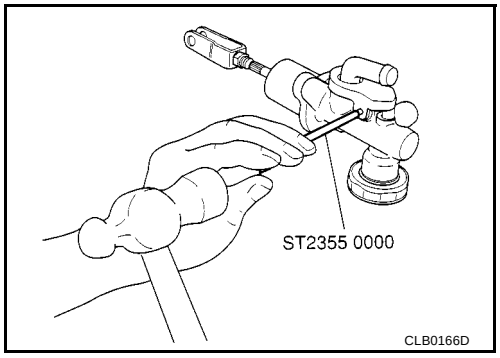

INSPECTION AFTER DISASSEMBLY

Check for any of the conditions shown below. If any malfunction is found, replace the part concerned.

- Damaged cylinder internal wall, foreign matter, wear, corrosion, or pinhole
- Damaged or deformed nipple or reservoir tank
- Settling of the spring
- Cracked or deformed dust cover

ASSEMBLY

1. Apply rubber lubricant to internal surface of the cylinder body, sliding surface of piston assembly, and the piston cup. Insert piston assembly and return spring.
2. Apply silicon grease to push rod and install stopper. Install stopper ring while holding down the push rod by hand to prevent the piston assembly from popping out.
3. Install dust cover.
4. Install clevis to the push rod and tighten lock nut to the specified torque.
5. Install seal and nipple to the cylinder body. Using a pin punch, install spring pin.

OPERATING CYLINDER

PFP:30620

Removal and Installation

ECS00956

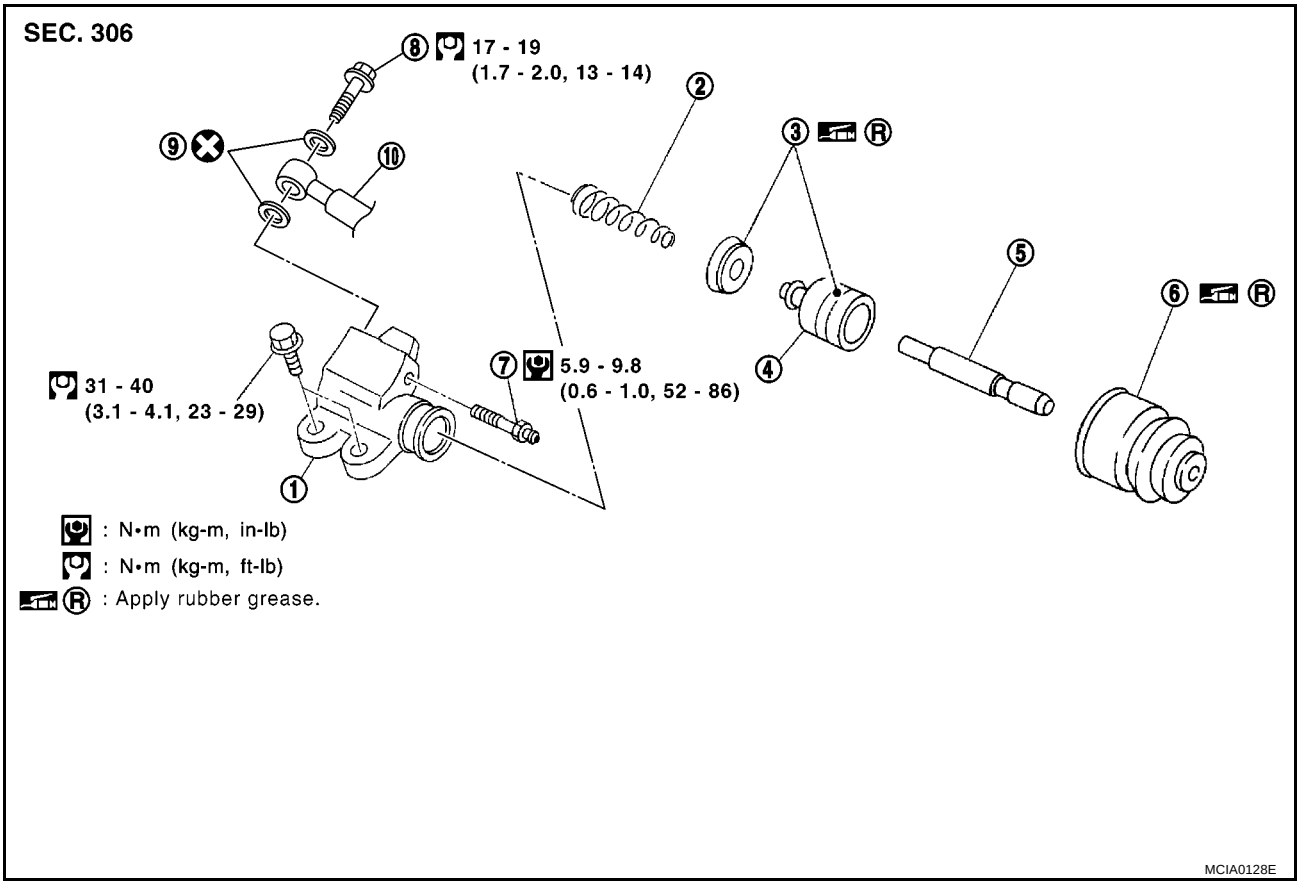

1. Cylinder body	2. Piston spring	3. Piston cup
4. Piston	5. Push rod	6. Dust cover
7. Air bleeder	8. Union bolt	9. Copper washer
10. Clutch hose		

REMOVAL

1. Drain clutch fluid.

   CAUTION:
   Do not spill clutch fluid onto painted surfaces. If it spills, wipe up immediately and wash the affected area with water.
2. Remove clutch hose from the operating cylinder.
3. Remove operating cylinder mounting bolt and remove operating cylinder.

INSTALLATION

Paying attention to the following items, install in the reverse order of removal.

- Install hose with care so that it will not be bent or twisted.
- After completing the procedure, bleed the clutch tube. Refer to CL-8, "Air Bleeding Procedure" .

Disassembly and Assembly

ECS00957

DISASSEMBLY

- Remove dust cover and push rod. Remove piston, piston cup, and piston spring from inside the cylinder body.

INSPECTION AFTER DISASSEMBLY

Check for any of the conditions shown below. If any malfunction is found, replace the part concerned.

- Damage to cylinder inner surface or piston sliding surface. Foreign matter, wear, corrosion, or pinhole
- Settling of the spring

- Cracked or deformed dust cover

ASSEMBLY

1. Apply rubber lubricant to cylinder body inner surface and rubber grease to the piston cup and piston. Insert piston assembly into the cylinder body.
2. Apply rubber grease to dust cover and install push rod and dust cover.

CLUTCH PIPING

PFP:30650

Removal and Installation

ECS00958

Carefully observe the following steps during clutch tube removal and installation.

- Do not spill clutch fluid onto painted surfaces. If it spills, wipe up immediately and wash the affected area with water.
- To fix clutch hose on the bracket, position hose clasp on the bracket locating embossment and drive the lock plate vertically from above. Be careful not to bend or twist the hose. Do not scratch or damage the clutch hose.
- Tighten clutch tube flare nut to the specified torque below:

  : 14.8 - 17.6 N·m (1.5 - 1.8 kg·m, 11 - 13 ft·lb)

- Tighten clutch hose union bolt to the specified torque:

  : 16.7 - 19.6 N·m (1.7 - 2.0 kg·m, 13 - 14 ft·lb)

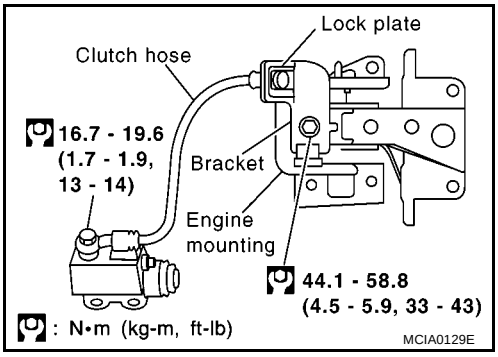

CAUTION:
Do not reuse the copper washer.

- After installation, bleed the clutch tube. Refer to CL-8, "Air Bleeding Procedure" .

CLUTCH RELEASE MECHANISM

PFP:30502

Removal and Installation

ECS0095A

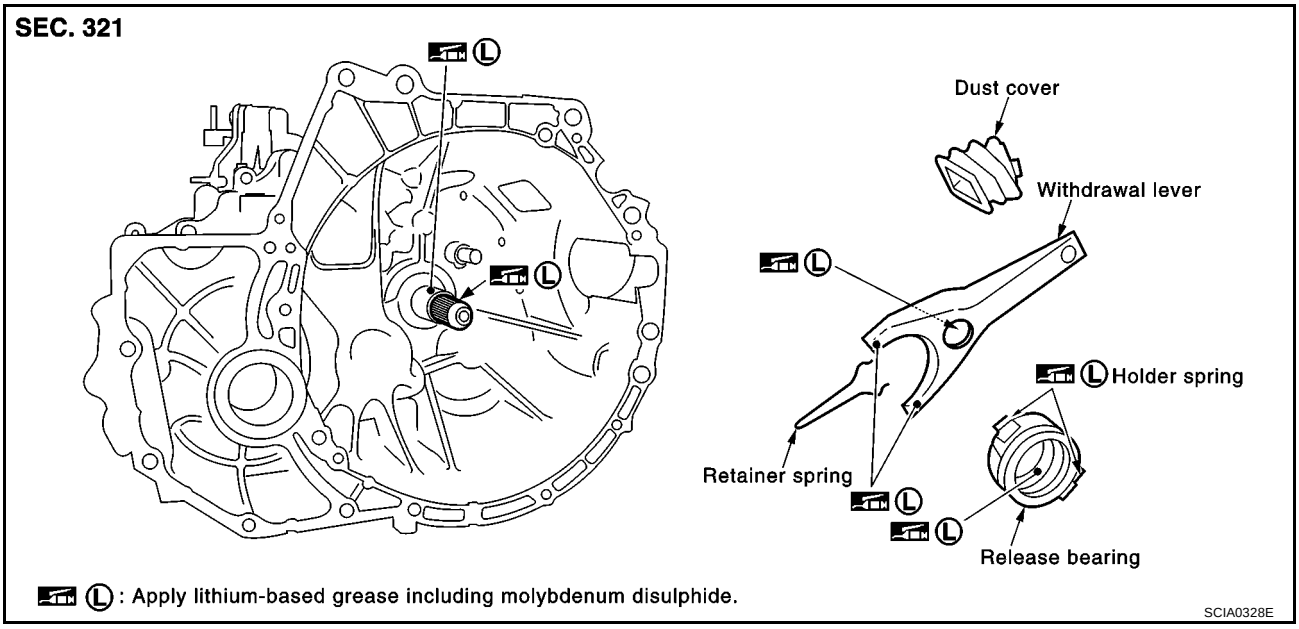

REMOVAL

1. Remove manual transaxle from the vehicle. Refer to MT-15, "TRANSAXLE ASSEMBLY" .
2. Remove release bearing, holder spring, and withdrawal lever from inside the clutch housing.
3. Remove dust cover.
4. Remove retainer spring from the withdrawal lever.

INSPECTION AFTER REMOVAL

- If release bearing is seized, damaged, not properly centered or does not rotate smoothly, replace it.
- If contact surface of the withdrawal lever is excessively worn, replace it.
- If dust cover is cracked, replace it.

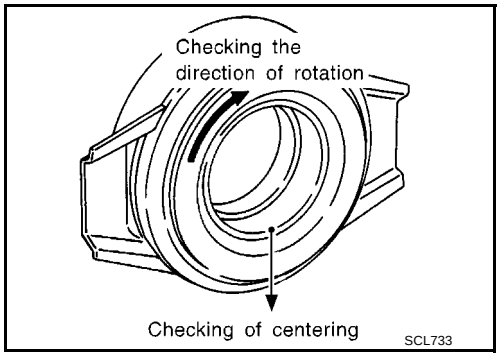

INSTALLATION

CAUTION:

- **Be sure to apply grease to the points specified. Otherwise, noise, poor disengagement, or damage to the clutch may result. Excessive grease may cause slip or judder. Wipe off any grease oozing from the parts.**
- **Be careful not to bring any grease into contact with the clutch disc facing, pressure plate surface, or flywheel surface.**

1. Following the instructions below, apply grease to the specified points.

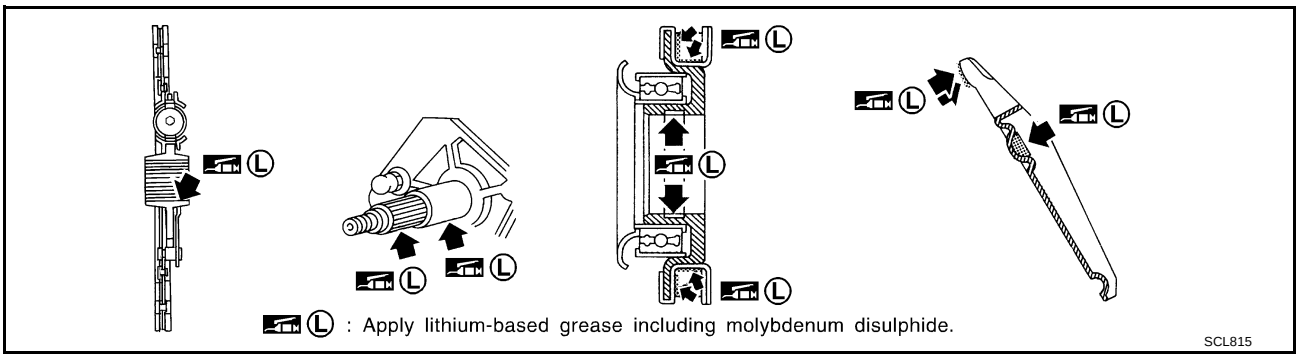

CAUTION:
Wipe off any old grease, debris, or powdery residue left on the grease applying surfaces.

- Evenly apply a 1-mm thick coating of recommended grease to withdrawal lever and holder spring sliding surface.
- Apply recommended grease to withdrawal lever ball pin contact surface and inner slots of the release bearing. The grease surface should be level with the surrounding area.
- Apply a thin coat of recommended grease evenly to the release bearing sliding surface. Install release bearing. Wipe off any excess grease that oozes from the parts and then remove release bearing.

2. Install in the reverse order of the removal.

CLUTCH DISC, CLUTCH COVER AND FLYWHEEL

PFP:30100

Removal and Installation

ECS0095B

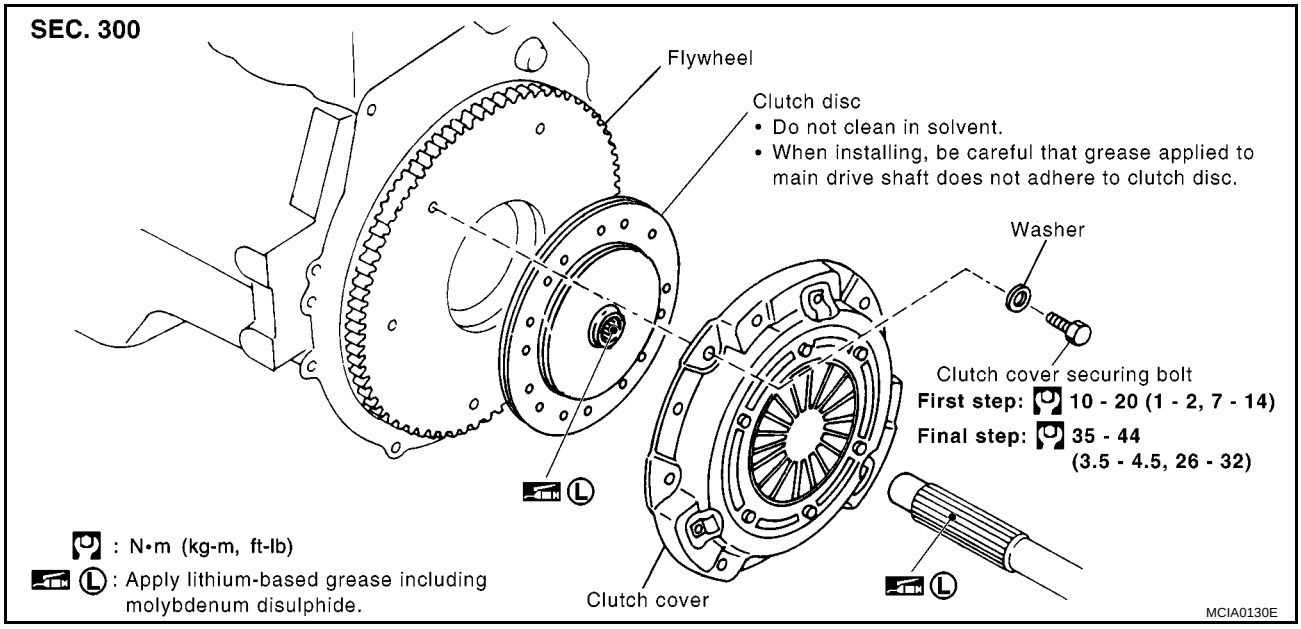

CAUTION:

Be careful not to bring any grease into contact with the clutch disc facing, pressure plate surface, or flywheel surface.

REMOVAL

1. Remove manual transaxle from the vehicle. Refer to MT-15, "TRANSAXLE ASSEMBLY" .
2. Loosen clutch cover mounting bolts evenly. Remove clutch cover and clutch disc.

INSPECTION AND ADJUSTMENT AFTER REMOVAL

Clutch Disc

- Measure circumferential runout relative to the clutch disc center spline. If it is outside the specification, replace the clutch disc.

  Runout limit/diameter of the area to be measured:

  MODEL 240 1.0 mm (0.039 in) or less/230 mm (9.06 in) dia.

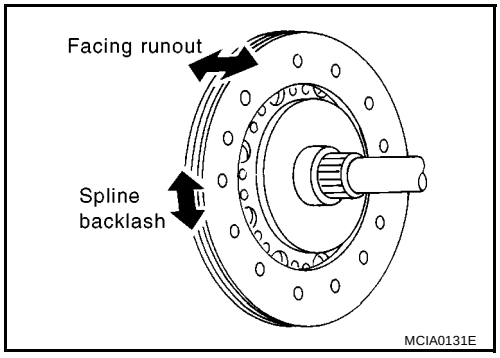

- Measure clutch disc spline and input shaft spline backlash at the circumference of the disc. If outside the specification, replace.

  Maximum allowable spline backlash:

  MODEL 240 1.0 mm (0.039 in)

- Using calipers, measure the depth to the clutch disc facing rivet heads. If it exceeds the allowable wear limit, replace the facing.

  Facing wear limit (depth to the rivet head):

  0.3 mm (0.012 in)

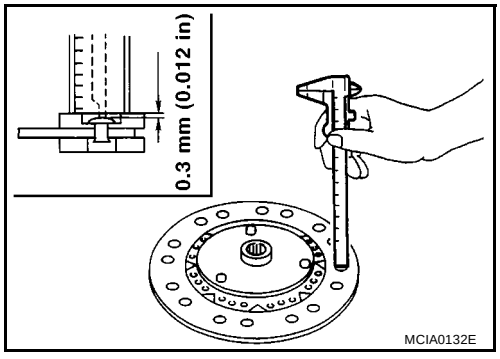

Clutch Cover

Check diaphragm spring lever claws for unevenness with the lever still on the vehicle. If they exceed the tolerance, adjust lever height using a diaphragm adjusting wrench (special service tool).

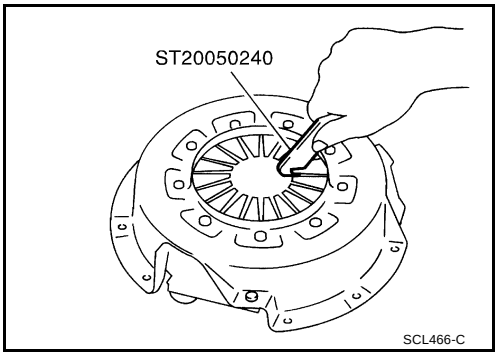

Tolerance for diaphragm spring lever unevenness:

MODEL 240 0.7 mm (0.028 in)

- Check clutch cover thrust ring for wear or breakage. If wear or breakage is found, replace clutch cover assembly.

  NOTE:
  - Worn thrust ring will generate a beating noise when tapped at the rivet with a hammer.
  - Broken thrust ring will make a clinking sound when cover is shaken up and down.
- If a trace of burn or discoloration is found on the clutch cover pressure plate to clutch disc contact surface, repair the surface with sandpaper. If surface is damaged or distorted, replace the assembly.

Flywheel Runout

Using a dial gauge, measure runout at the flywheel clutch contact surface. If runout is outside the specification, replace the flywheel. If a trace of burn or discoloration is found on the surface, repair it with sandpaper.

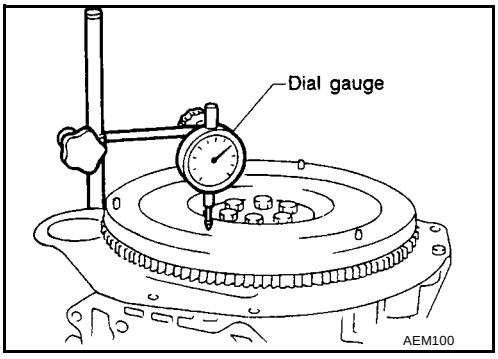

Allowable flywheel runout:

EM-221, "Flywheel Runout"

CAUTION:
Measure it at flywheel outer face (not on knock pin and clutch cover mounting hole).

INSTALLATION

1. Apply recommended grease to clutch disc and input shaft splines.

   CAUTION:
   Be sure to apply grease to the points specified. Otherwise, noise, poor disengagement, or damage to the clutch may result. Excessive grease may cause slip or judder. Wipe off any grease oozing from the parts.

2. Install clutch disc and clutch cover. Pre-tighten mounting bolts and install clutch aligning bar.

Engine type	Tool number
YD22DDTi	ST20630000

3. Tighten clutch cover attaching bolts evenly in two steps in the order shown in the figure.

   Tightening torque:

   First step : 9.9 - 19 N·m (1.0 - 2.0 kg·m, 7 - 14 ft·lb)

   Final step : 35 - 44 N·m (3.5 - 4.5 kg·m, 26 - 32 ft·lb)

4. Install manual transaxle. Refer to MT-15, "TRANSAXLE ASSEMBLY" .

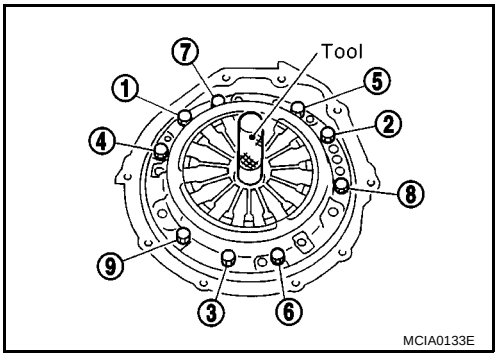

SERVICE DATA AND SPECIFICATIONS (SDS)

PFP:00030

Clutch Control System

ECS0095C

Type of clutch control	Hydraulic

Clutch Master Cylinder

ECS0095D

Unit: mm (in)

Inner diameter	15.87 (5/8)

Clutch Operating Cylinder

ECS0095E

Unit: mm (in)

Inner diameter	19.05 (3/4)

Clutch Disc

ECS0095F

Unit: mm (in)

Engine type	YD22DDTi
Model	240
Facing size (outer dia. × inner dia. × thickness)	240 × 170 × 3.5 (9.45 × 6.69 × 0.138)
Thickness of disc assembly with lord	7.5 - 8.1 (0.295 - 0.319) with 6,865 N (700.2 kg, 1543.3 lb)
Wear limit of facing surface to rivet head	0.3 (0.012)
Runout limit/diameter of the area to be measured	1.0 (0.039) or less/230 (9.06) dia.
Maximum allowable spline backlash	1.0 (0.039)

Clutch Cover

ECS0095G

Unit: mm (in)

Engine type	YD22DDTi
Model	240
Full-load	6,867 N (700.4 kg, 1543.7 lb)
Diaphragm spring lever height	37.0 - 39.0 (1.457 - 1.535)
Uneven limit diaphragm spring toe height	0.7 (0.028)

Clutch Pedal

ECS0095H

Unit: mm (in)

Clutch pedal stroke “S”	155 - 160 (6.10 - 6.30)
Pedal free play “A”	1 - 3 (0.04 - 0.12)